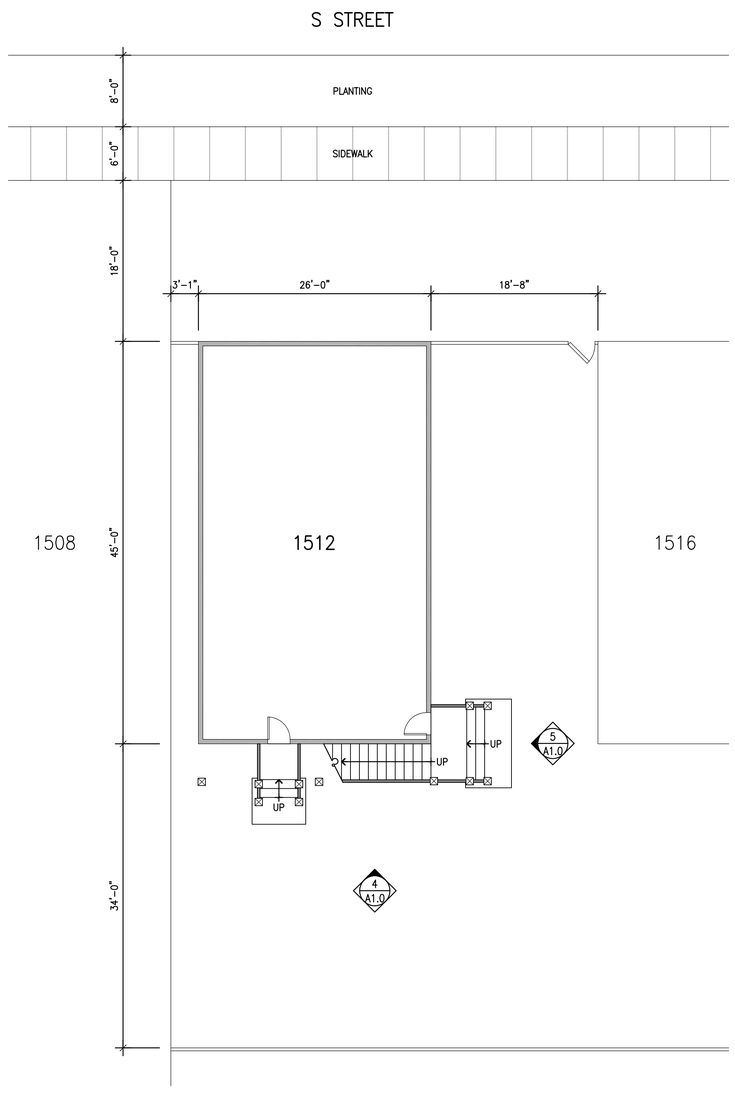

1 Plot Plan

Scale: 1/8" = 1'-0"

North

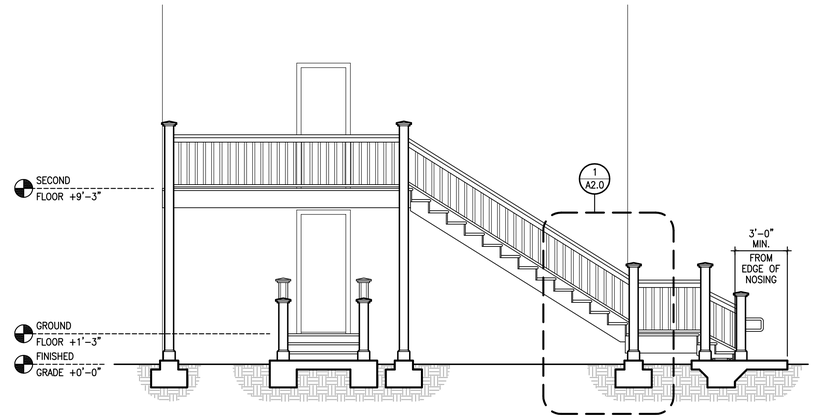

4 Stair Elevation

Scale: 1/4" = 1'-0"

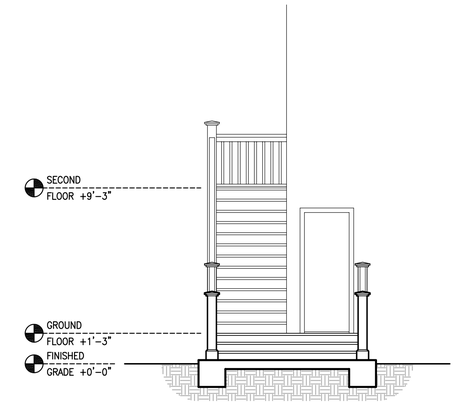

5 Stair Elevation

Scale: 1/4" = 1'-0"

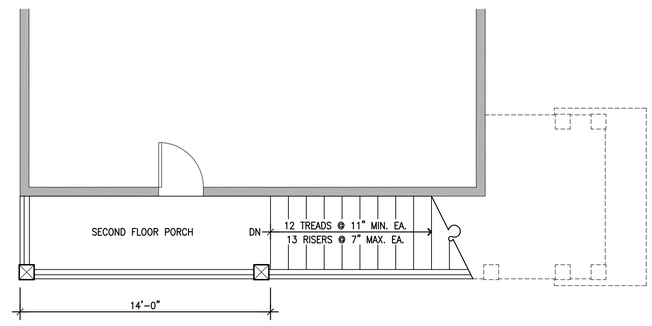

3 Second Floor Plan

Scale: 1/4" = 1'-0"

North

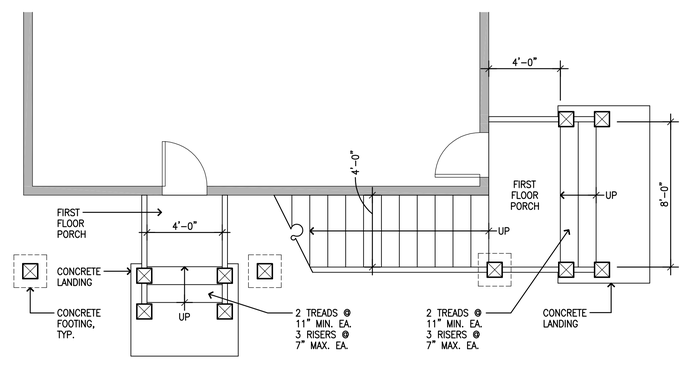

2 First Floor Plan

Scale: 1/4" = 1'-0"

North

TPWCO
Electrical & Lighting Systems Design

3346 Barmouth Drive - Antioch, CA 94509
Tel: (925) 754-9027 Fax: (925) 754-9375
Email: design@tpwco.com

Revisions

No.	Description	Date
1	ISSUED FOR PERMIT	09.17.08
2	PLANCHECK/REVIEW	10.31.08

Stair Replacement & Preservation Project

1512 - S Street
Sacramento, California 95811

Sheet Title:

Plans & Elevations

Date:	09.10.08
Scale:	AS NOTED
Project No.:	0809.10

Sheet No.:

A1.0